BODY, DASH STORAGE - Z26NMY99A4/B4/A6/B6 (C0705025-3)

2026 RZR - RZR XP S 4 1000 ULTIMATE (R01) - Z26NMY99A4/B4/A6/B6

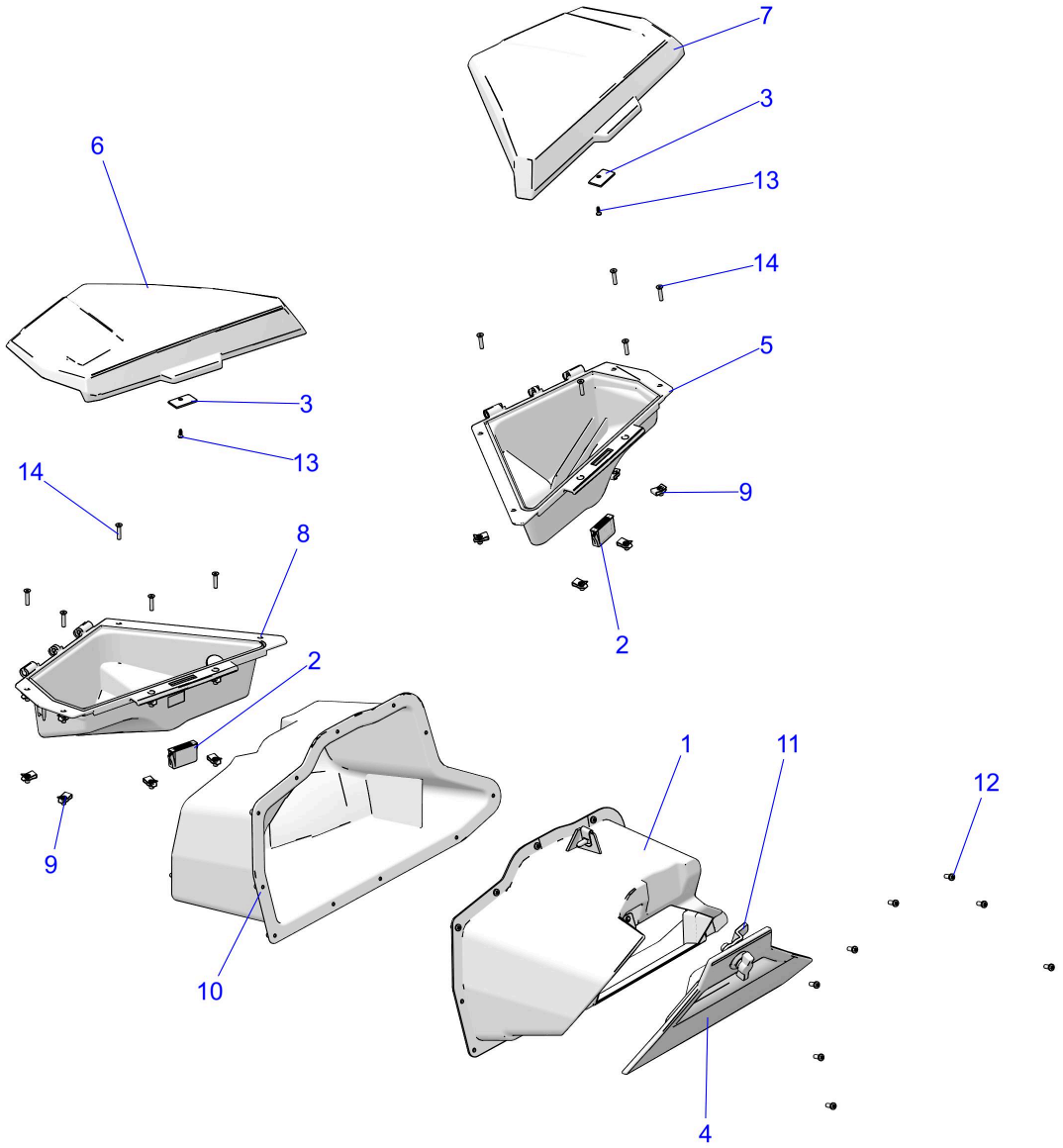

© 2021 Polaris Industries Inc. C0705025-3

Reference #	*Part#*	*Description*	*Quantity*
1	2638278-070	ASM-GLOVE BOX,BLK [INCL. 2,10,12]	1
1	5458988-070	GLOVE BOX,OUTER,BLK	1
2	2638374	ASM-LATCH,MAG,STORAGE	2
3	2638375	ASM-LATCH,MAG,STRIKER	2
4	5456562-070	LID-GLOVEBOX,BLK	1
5	5456564-070	STORAGE BIN,IP,RH,BLK	1
6	5457678-070	LID-STORAGE,LH,BLK	1
7	5457679-070	LID-STORAGE,RH,BLK	1
8	5458239-070	BIN-STORAGE,IP,LH,ROUTER,BLK	1
9	7547306	NUT, U TYPE, M4	12

10	5457333-070	GLOVE BOX,INNER,BLK	1
11	7081425	LATCH-1/4 TURN,CAM	1
12	7519091	SCR-#10X1/2-HI/LO-PN-T25, TRX-M	11
13	7527913	SCR-FLHD-M3X1.27X10 STL ZTB	2
14	7518603	SCR-FLHD-M4X0.7X20 10.9 ZPC	12

Copyright 1996-2026 Polaris Industries U.S.A All rights reserved.